INSTALLATION, OPERATION, AND MAINTENANCE MANUAL
SCV SINGLE CARTRIDGE FILTER VESSELS



IMPORTANT: READ AND UNDERSTAND THIS ENTIRE MANUAL BEFORE OPERATING FILTER VESSEL. THIS DOCUMENT SERVES AS AN OVERVIEW FOR WORKING WITH A BEHRINGER VESSEL.

ALL INDUSTRY SAFETY STANDARDS APPLY.

BEHRINGER®
17 Ridge Road, Branchville, NJ 07826
Tel: (973) 948-0226 | Fax: (973) 948-2562
Web:www.behringersystems.com

Process Filter Division
Manual No. PF4030.SCV.OM-26.06

PARTS BREAKOUT / SPARE PARTS LIST

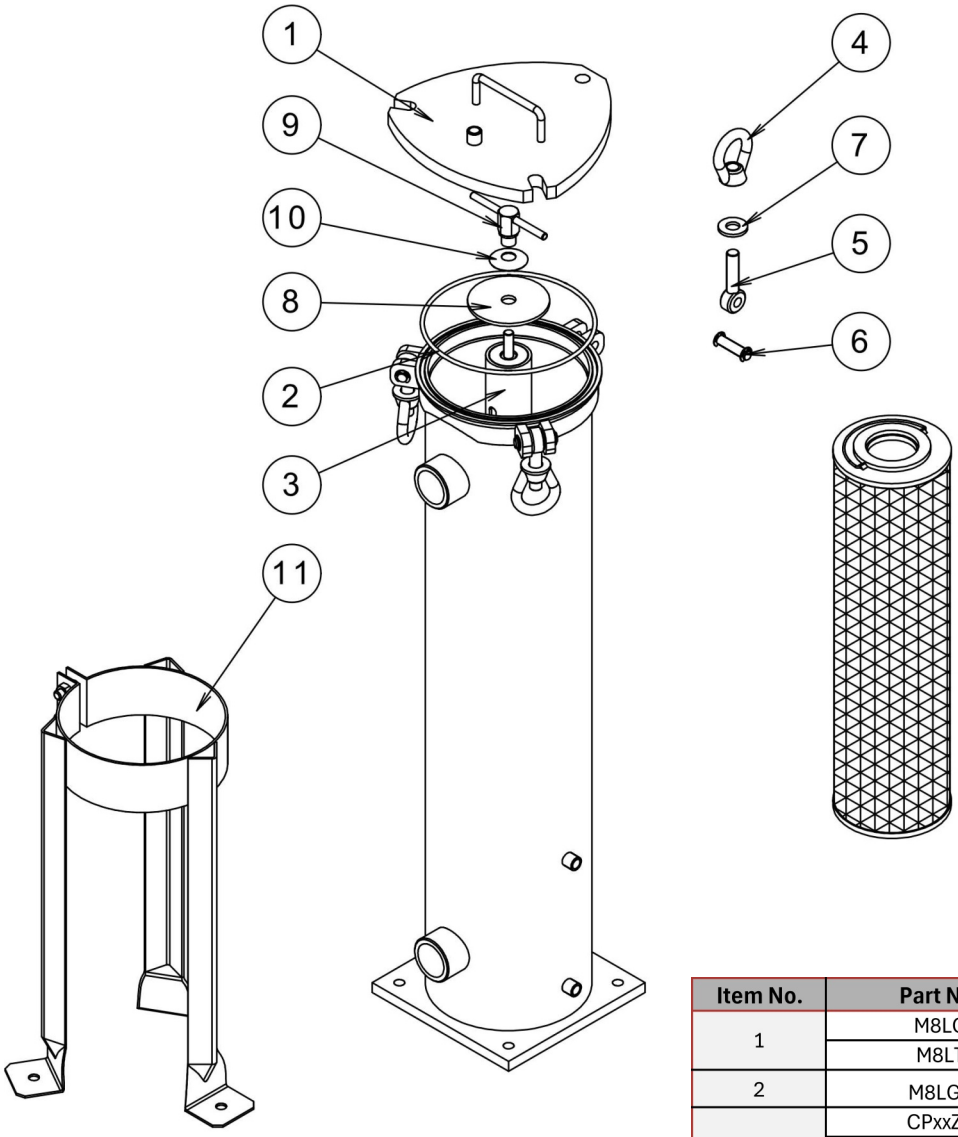

Item No.	Part No.	Description
1	M8LC	Lid, Carbon Steel
	M8LT	Lid, 304 Stainless Steel
2	M8LG*	Lid Gasket, *Specify Material Code
3	CPxxZ1	Cartridge Post, 101 Style, Zinc
	CPxxZ7	Cartridge Post, Coreless Style, Zinc
	CPxxT1	Cartridge Post, 101 Style, 304SS
	CPxxT7	Cartridge Post, Coreless Style, 304SS
4	M8EN	Eye Nut
5	M8RE	Rod End
6	M8CPA	Clevis Pin Assembly
7	M8FW	Flat Washer
8	101TPZ	Top Plate for BE101 Style, Zinc Plated
	101TPT	Top Plate for BE101 Style, 304SS
9	101HNZ	Cartridge Nut for BE101 Style, Zinc Plated
	101HNT	Cartridge Nut for BE101 Style, 304SS
10	101SWT	Sealing Washer, 304SS
11	M8LAC	Leg Assembly, Carbon Steel
	M8LAT	Leg Assembly, Stainless Steel

BEHRINGER FILTER VESSELS ARE DESIGNED TO SAFELY FILTER LIQUIDS UNDER PRESSURE IN ACCORDANCE WITH TEMPERATURE AND PRESSURE RESTRICTIONS AS STAMPED ON THE NAME PLATE AFFIXED TO THE PRODUCT.

INSTALLATION

1. Remove all shipping and packaging materials carefully, including all crating that the vessel may be shipped in.

2. Vessel can be lifted by means of a multi-legged sling chain with a safety hook attached to the end of each leg. Attach the hook of each leg to an eye nut and space legs around vessel equally.

3. Securely anchor the adjustable tripod stand to a floor or a base.

4. Check the inner housing and pipe connections for foreign material and discard any items that have entered during shipping or unpacking.

5. Piping material used should be the same as the base material of the vessel. It should have a rating equal to or greater than the pressure and temperature rating of the vessel.

6. After completing installation, be sure to double check connections for integrity. Your vessel has been factory pressure tested to be leak-free. Therefore, most seepage problems typically occur from improper installation connections.

7. Ensure that the inlet connection is properly identified and flow direction is correct.

8. Applications may require special procedures for proper installation and/or safety (i.e. electrical grounding, pressure relief, flow bypass systems, etc.). Please consult with Behringer regarding any variations.

9. NPT(F) ports are provided for pressure gauges, vents, pressure relief valves, temperature gauges, and/or drain valves. Accessory products should be mounted and checked for connection integrity.

10. To install the filter element, remove the cover by loosening the eye nuts. Note: eye nuts do not need to be fully removed from housing. For smaller vessels, the lid can be manually lifted and will swing away. For larger vessels, use the provided hydraulic lifting device to lift the cover, then move the cover away from housing for access to the element.

11. Place new elements into the filter housing over the center post or tube, making sure that the element is centered on the cups in the bottom of the vessel. Place applicable top plate, washer(s) and nut on each open element end.

INSTALLATION (CONTINUED)

12. IMPORTANT: It is the responsibility of the end-user to protect system components from being over-pressurized. This can be achieved by installing a system relief valve.

13. Inspect cover seal before replacing cover. Slowly lower the cover so that element cup and spring assemblies are not disrupted.

14. Filter outlet is below the tubesheet in vessel body or bottom.

15. Shut-off valves should be installed before and after vessel to allow isolation of vessel for element change-out.

16. Vessel bypass system may be desirable.

17. Behringer advises to pressurize system to check for installation leaks. IMPORTANT: Pressurize with liquid only, DO NOT pressurize with air or other gasses!

18. Ensure that the vessel has not been bent or twisted in any way when making piping connections, as this may cause leaks to occur.

19. Your Behringer filter vessel is now ready for operation.

GENERAL RULES

Initial operating pressure with clean filter cartridges installed in the vessel will remain constant until the filter is approximately 80% "blinded".

When the pressure differential increases by approximately 20-25 PSI, the filter elements should be changed. This recommended change-out can vary with material and micron rating of elements, as well as type of element installed (i.e. standard DOE cartridge element versus coreless element with integral 25 or 45 psi bypass. Actual pressure differential, pressure drops, and frequency of filter element changes can only be determined by experience in each individual application.

Behringer always recommends that there is a method for measuring and monitoring pressure differential so that proper service intervals can be established based on the required change-out differential pressure of the filter cartridge installed and/or application requirements.

OPERATION

IT IS IMPORTANT THAT ALL DIRECTIONS IN THIS SECTION ARE FOLLOWED WHEN OPENING AND CLOSING THE FILTER VESSEL. IT IS CRITICAL TO RELIEVE PRESSURE BEFORE OPENING THE VESSEL. THIS CAN BE DONE BY OPENING EITHER THE VENT VALVE OR DRAIN VALVE.

The following instructions assume that the drain valve is piped back to the holding tank or reservoir.

FOR START-UP

Before utilizing the vessel, the following checks need to be performed:

- Ensure that clean filter elements are installed in the housing.
- Confirm that the cover is securely fastened to the housing using the tightening method described in the technical appendix.
- Slowly open the inlet service line to 25% of normal operation flow. This will ensure that the cartridge(s) are not disrupted while the vessel is filling.
- After the vessel is pressurized and vented, slowly open the outlet service line valve until completely open.
- Complete opening of inlet service line valve until desired flow rate is achieved.
- The filter will operate effectively until

TO CLEAN OR REPLACE FILTER MEDIA:

- Close the flow from the inlet valve.
- Close the flow from the outlet valve.
- Relieve the pressure from the filter unit.
- Drain the filter housing sufficiently to access filter elements. Fluid should be drained significantly from the dirty side of the housing. Do not allow dirty fluid to pass to the clean side while removing elements
- Remove cup and spring assemblies or applicable element cap and nut. Set aside.
- Remove filter element(s) and dispose of properly in accordance with all applicable regulations. Do not reuse filter elements.
- Remove debris and sludge from inside the filter, exercising caution not to allow any contaminant to pass to the clean side.
- Ensure element post(s) are clean and install new filter elements.
- Replace cup and springs or element plate and nut assemblies.
- Remove and inspect cover gasket. Replace cover gasket if damaged.
- Replace lid using the tightening method described in the technical appendix.

MAINTENANCE

GENERAL CARE

- Gaskets are subject to wear and should be inspected each time the filter lid is opened. Check for dirt, debris, cuts, abrasions, or swelling. Any of these issues necessitates replacement of the gaskets. Replacement of gaskets should be done prior to pressurization of the vessel. Be certain that the fluid to be filtered is chemically and thermally compatible with the filter vessel, seal materials, and filter cartridge materials. Fluid compatibility is critical for all materials in contact with the liquid under elevated temperature and pressure.
- Keep vessel clean of excessive dirt that may impair vessel, hindering optimum performance.
- Inspect all connections regularly and check for signs of damage or leakage. This includes all inlet/outlet connections as well as vent, drain, and gauge/indicator connections. In the event that damage or leakage is found, replace and/or repair the damaged components with genuine parts and in accordance with all industry and local codes and regulations.

SAFETY

This manual has been prepared for the safe installation, operation, and maintenance of Behringer Corporation pressure vessels. Note: Improper use of filter vessel may result in injury or property damage. Any misuse or modification of these products will void any warranties and/or responsibility of the manufacturer.

WARNING: Before operating this vessel, operator should wear proper personal protective equipment (PPE). Before pressurizing a filter vessel, always ensure that the connections and lid hardware are securely fastened. Always relieve the pressure to the filter system before loosening the hardware.

IMPORTANT NOTE: A filter element that has been used with a hazardous liquid may contain residual amounts of this material and should be handled with the same safeguards that would be used in handling any hazardous and/or toxic materials (i.e. gloves, safety garments, respirators, protective eyewear, etc.). Always wear the proper PPE.

TECHNICAL APPENDIX

Bolt tightening should be done in accordance with the procedure and tightening torques recommended below.

1. Hand tighten following pattern shown
2. Tighten with wrench following pattern shown
3. Tighten each bolt in a clockwise pattern.

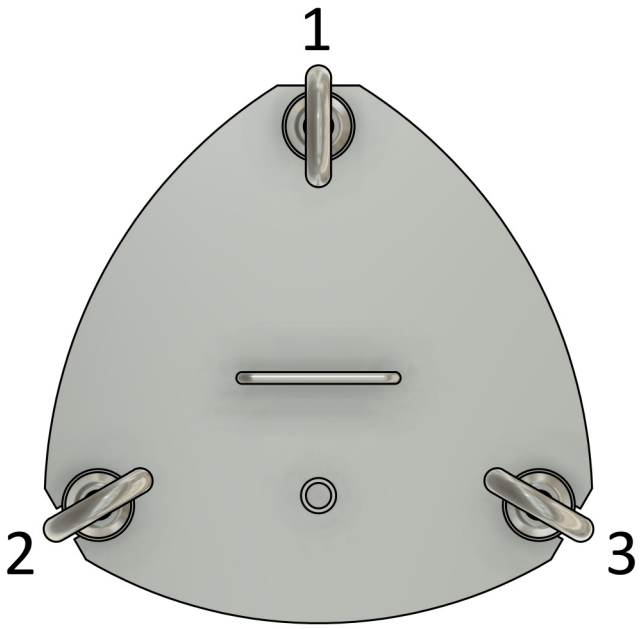

ORDER
1. 1-2-3
2. 1-2-3
3. 1-3-2

Torque (Ft-Lbs) for ASTM 193 Grade B7 Rod Ends			
Bolt Dia.	Torque (Ft-Lbs)		
	30% Initial	70%	100% Final
1/2"	17	39	55
5/8"	33	77	110
3/4"	59	137	195
7/8"	93	217	310
1"	140	325	465